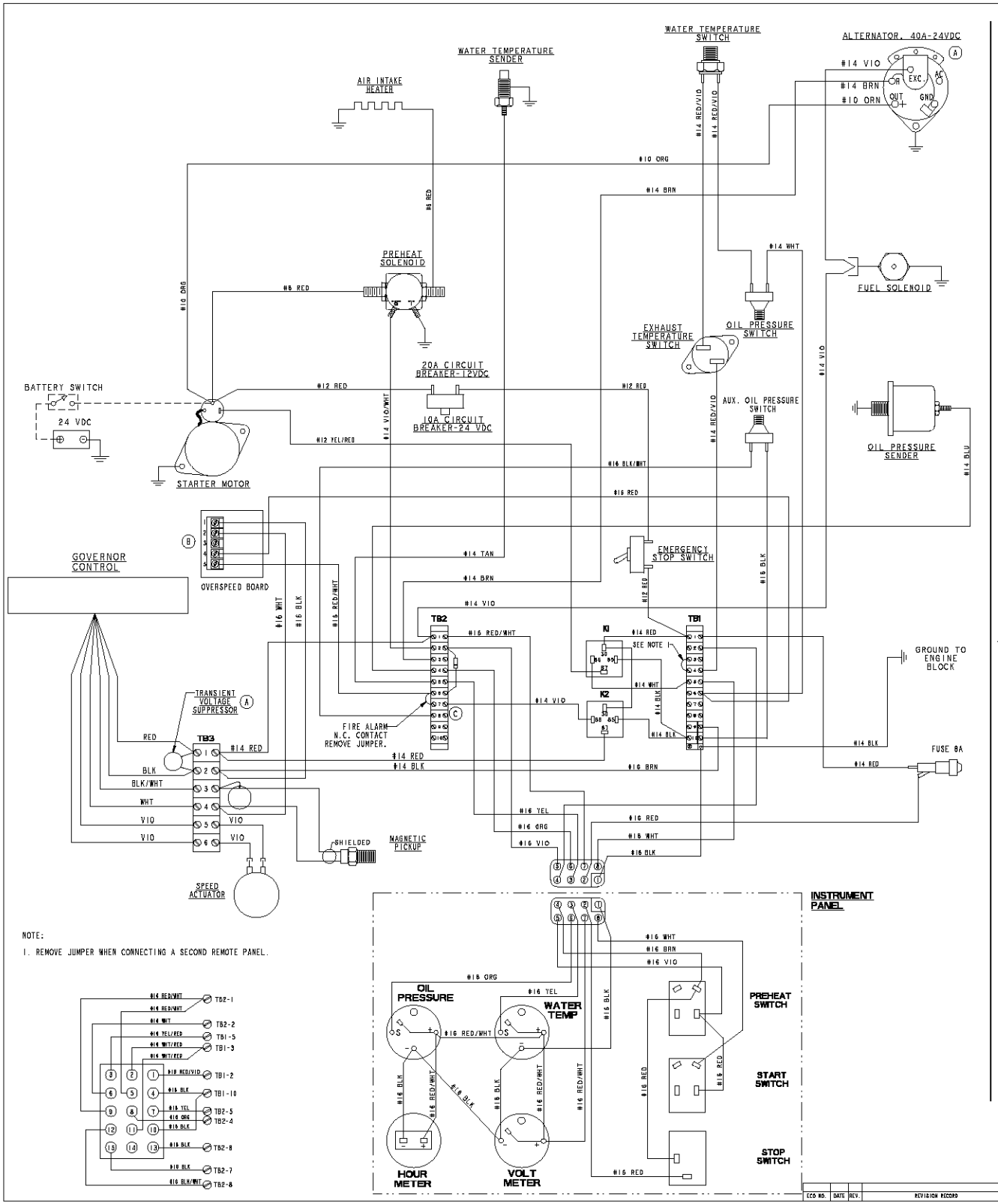

NOTE:

1. REMOVE JUMPER WHEN CONNECTING A SECOND REMOTE PANEL.

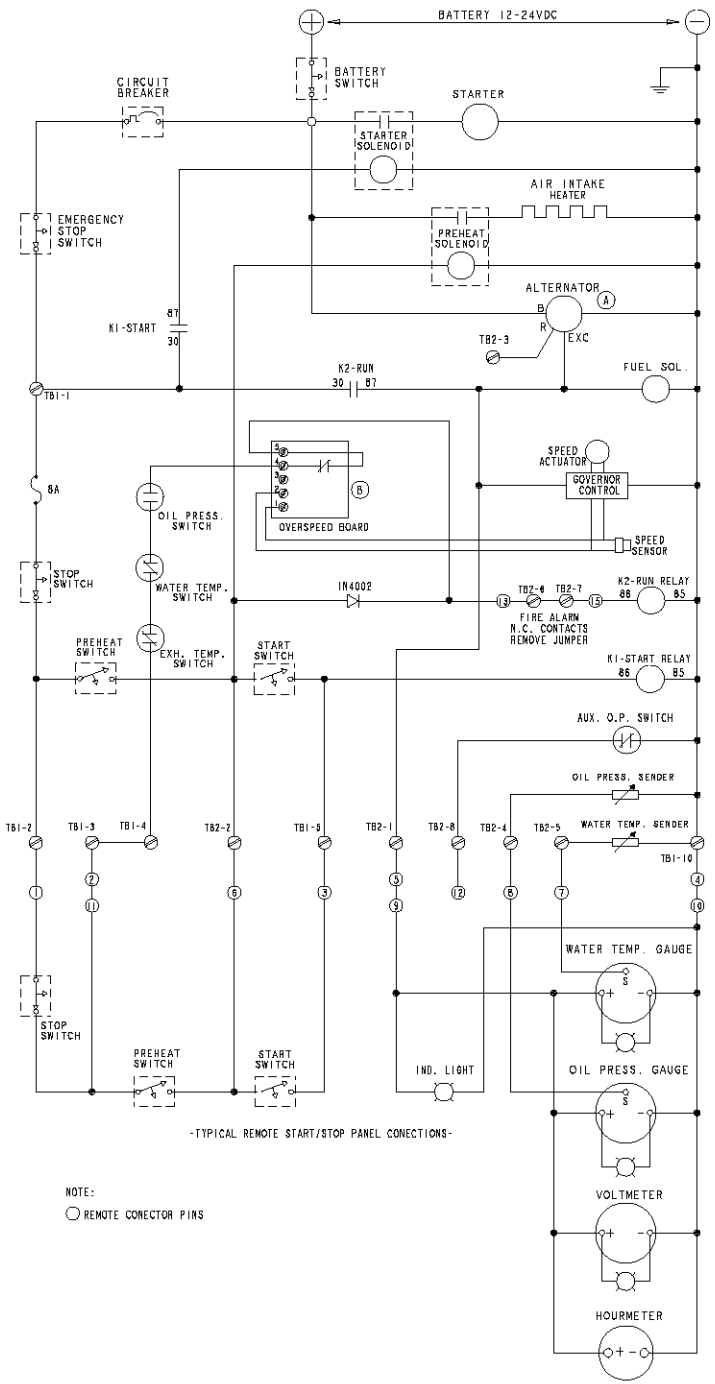

-TYPICAL REMOTE START/STOP PANEL CONECTIONS-

NOTE:

○ REMOTE CONECTOR PINS

ECO NO.	DATE	REV.	REVISION RECORD	AUTH.	DR.BY
5561	11-3-2004	C	ADDED JUMPER BETWEEN TB2-6&7; K2-86 WAS CONNECTED TO TB2-6.		GA
5536	7-23-2003	B	ADDED OVERSPEED BOARD		GA
4632	7-8-1	A	UPDATED ALTERNATOR WIRING SCHEMATIC, ADDED TRANSIENT VOLTAGE SUPPRESSOR TO CIRCUIT.		TGN

TOLERANCES (UNLESS OTHERWISE NOTED): FRACTIONS ±1/64, DECIMALS ±.01, ANGLES ±1°, FINISH 63 — INCHES / MILLIMETERS

DIMENSIONS: INCHES / MILLIMETERS — TRACE APPLICABILITY

WESTERBEKE CORPORATION
AVON MA. 02322

TITLE: WIRING DIAGRAM/SCHEMATIC, VIKING 32.0 BEDA VIKING SRC 12-24V

DRAWN BY: GPO — DATE: 10/Mar/00 — REFERENCE: -
APPROVED BY: — DATE: -

SCALE: NONE — SIZE: E — DRAWING NUMBER: 44806 — REV: C

SHT. 1 of 1