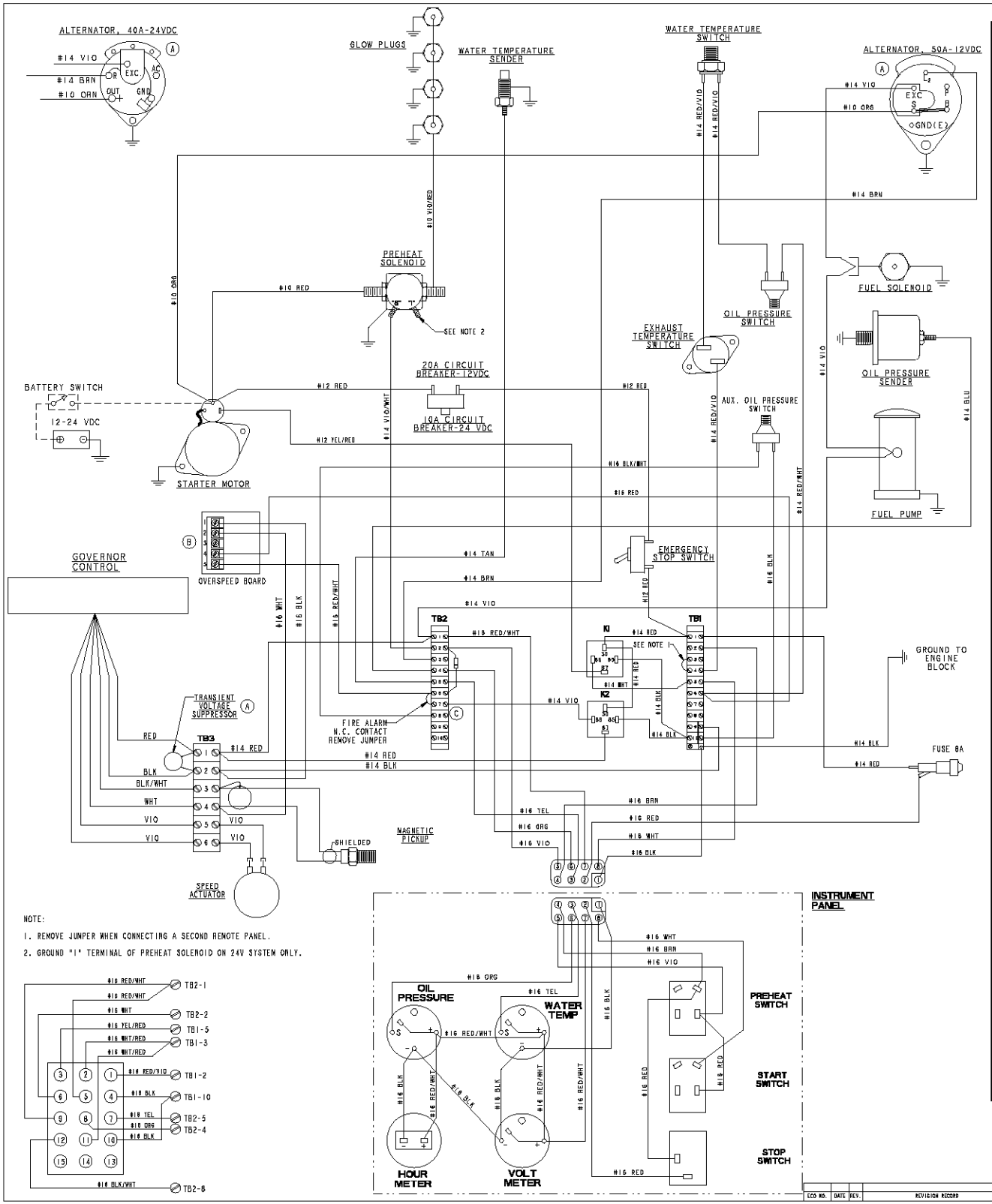

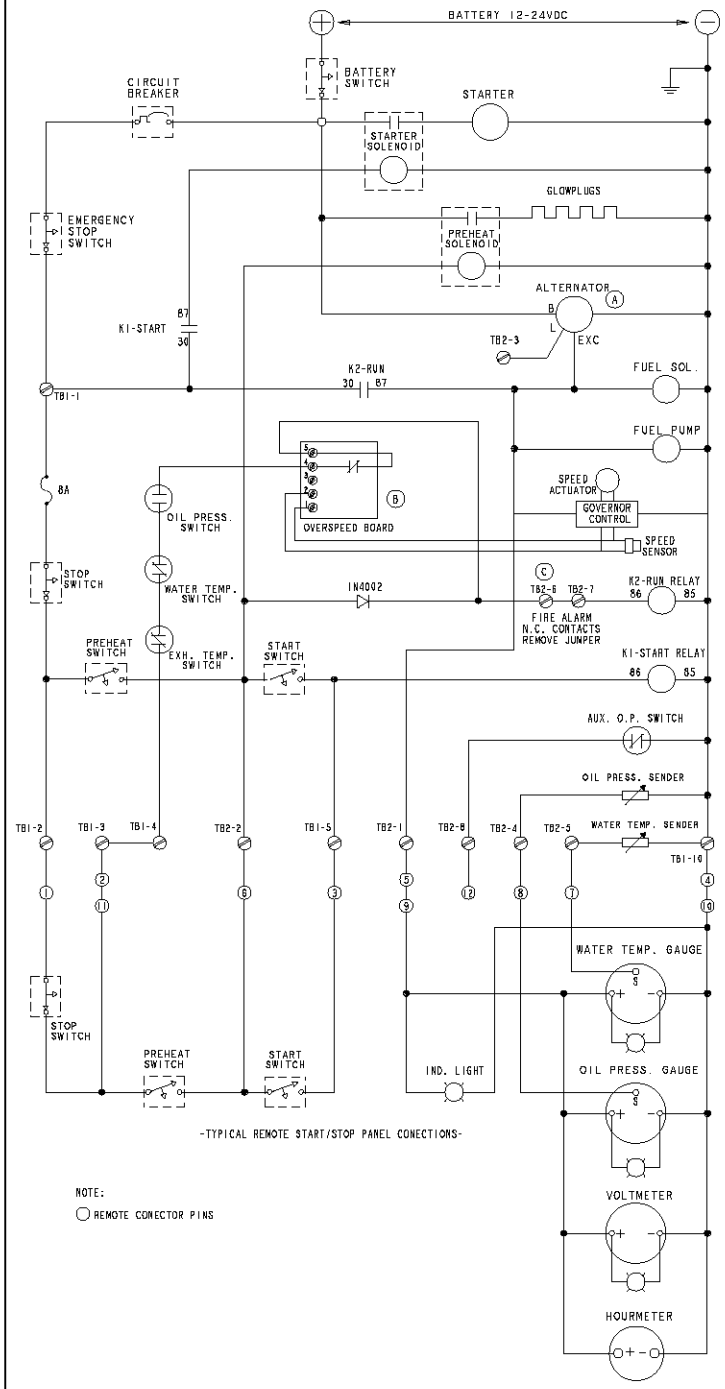

-TYPICAL REMOTE START/STOP PANEL CONECTIONS-

NOTE:

REMOTE CONECTOR PINS

ECO NO.	DATE	REV.	REVISION RECORD	AUTH.	DR.BY
5561	11-3-2004	C	ADDED JUMPER BETWEEN TB2-6&7; K2-86 WAS CONNECTED TO TB2-6.	GA	
5536	4-29-2003	B	ADDED OVERSPEED BOARD	GA	
4632	7/07	A	UPDATED ALTERNATOR WIRING SCHEMATIC, ADDED TRANSIENT VOLTAGE SUPPRESSOR TO CIRCUIT.	TGN	

TOLERANCES (UNLESS OTHERWISE NOTED)
INCHES: .XX ±.03, .XXX ±.010, ANGLES ±1°, FINISH ±
MILLIMETERS: X.X ±.1, X.XX ±.25
DIMENSIONS: INCHED / MILLIMETERS
TRACE APPLICABILITY

WESTERBEKE CORPORATION
AVON MA. 02322

TITLE: WIRING DIAGRAM/SCHEMATIC, 20.0 BEDA, 25.0 BED - SRC

DRAWN BY: GPG | DATE: 10/Mar/00 | DATE CLEAR: - | APPROVED BY | DATE | SCALE: NONE | SIZE: E | DRAWING NUMBER: 44736 | REV: C

SHT. 1 of 1