ECO NO.	DATE	REV.	REVISION RECORD	AUTH.	DR.BY
5229	3/7/02	A	#12 RED WAS #14 RED		GA

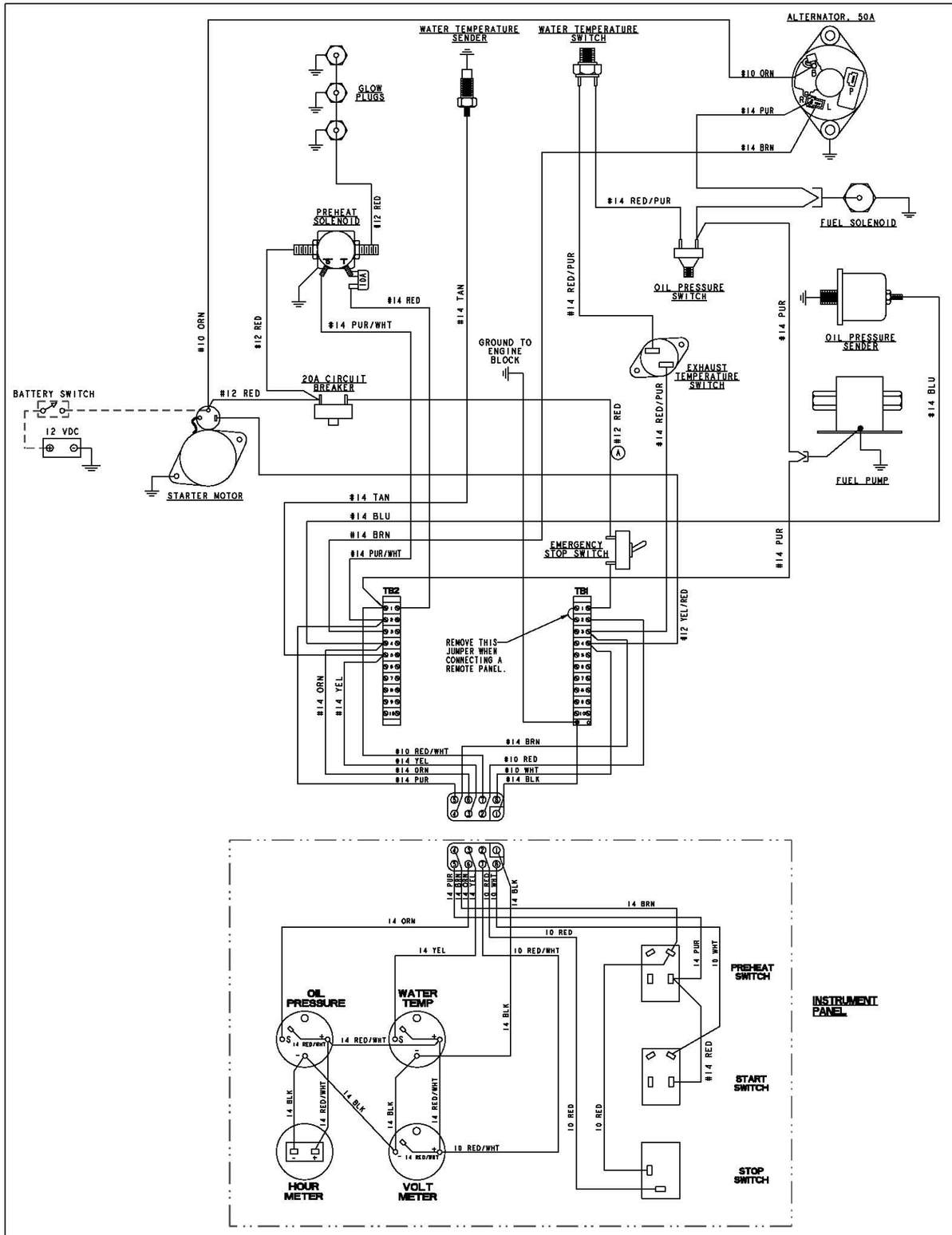

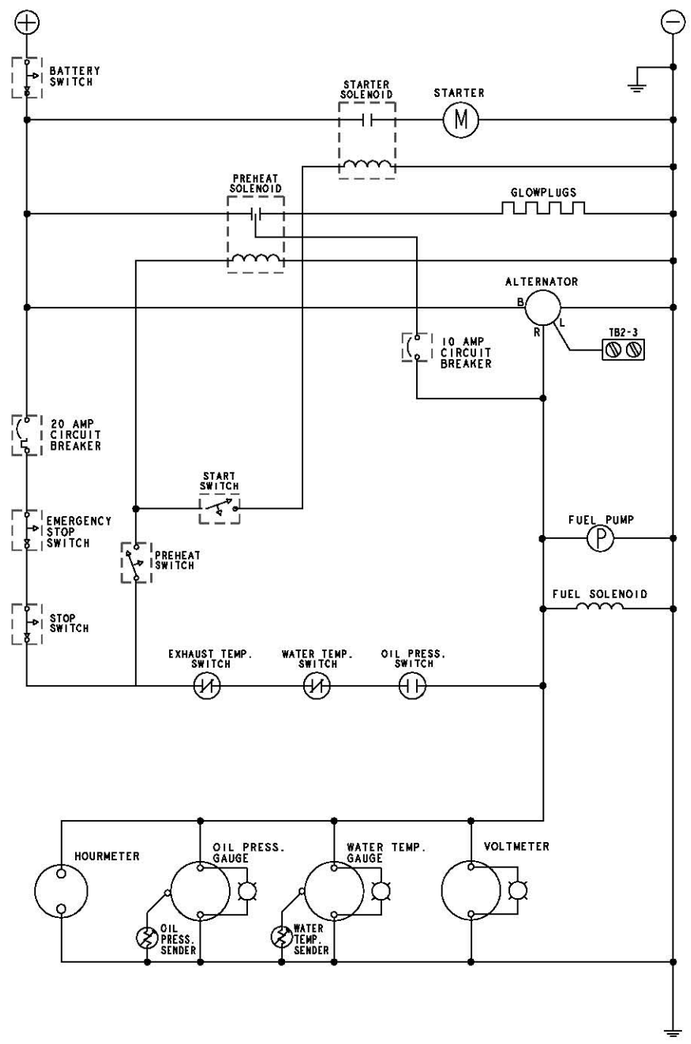

TOLERANCES	WESTERBEKE CORPORATION AVON MA. 02322
INCHES .XX ±.02 .XXX ±.005 .XXX ±.03 ANGLES ±1° FINISH 63	TITLE WIRING DIAGRAM AND SCHEMATIC 8.0, 10.0, 11.0 BTD AND 12.5 BTDA
DIMENSIONS INCHES MILLIMETERS (WHEN APPLICABLE)	DRAWN BY JEC · DATE 3/11/98 · MATERIAL - · DATE - · SCALE - · SHT. 1 OF 1 · SIZE E · DRAWING NUMBER 43853 · REV. A