ECO NO.	DATE	REV.	REVISION RECORD	AUTH.	DR. BY

SERVICE PARTS			
38530	ALTERNATOR, 42A 24VDC	35110	OIL PRESSURE METER
38790	ALTERNATOR, 50A, 12VDC	24122	OIL PRESSURE SENDER
32977	BELT, ALTERNATOR, 12VDC	37323	OIL PRESSURE SWITCH
3911	BELT, ALTERNATOR, 24VDC	13769	PAINT, RED AEROSOL
24306	CAP, PRESSURE	42307	PAINT, WHITE AEROSOL
24883	CIRCUIT BREAKER, 20A, 12VDC	36538	PANEL, GENSET CONTROL
41061	DIODE	24943	PANEL, REMOTE STOP/START
40042	DIPSTICK	24732	PREHEAT & START SWITCH
33254	EMERGENCY STOP SWITCH	40362	PUMP, FRESH WATER
14776	FILTER, FUEL (ELEMENT)	42336	REGULATOR, VOLTAGE
45279	FILTER, FUEL (SPIN ON)	32973	REMOTE LUBE OIL FILTER
40154	FILTER, LUBE OIL	46904	SILENCER/FILTER, AIR INTAKE
40390	FUEL HARDWARE KIT	23041	SOLENOID, FUEL SHUT OFF, 12VDC
40386	GASKET SET, COMPLETE	19348	SOLENOID, FUEL SHUT OFF, 24VDC
40385	GASKET SET, UPPER	40389	SOLENOID, PREHEAT, 12VDC
40363	GASKET, FRESH WATER PUMP	41064	SOLENOID, PREHEAT, 24VDC
32698	GASKET, HEAD	44491	SPARE PARTS KIT A
32790	GASKET, OIL PAN	36384	STARTER MOTOR, 12VDC
32760	HARNESS, 18 FT. EXT, 8 PIN	42731	STARTER MOTOR, 24VDC
40225	HOSE, RADIATOR TO FWP	36623	STARTER SOLENOID, 12VDC
39919	HOSE, RADIATOR, UPPER	39538	STARTER SOLENOID, 24VDC
40342	INJECTION PUMP	24731	SWITCH, STOP
40330	INJECTOR	24977	TANK, COOLANT RECOVERY
40331	INJECTOR NOZZLE	24690	THERMOSTAT
40348	INJECTOR RETURN LINE	39651	THERMOSTAT MOUNTING GASKET
15239	ISOLATORS, FRONT & REAR	3611	VOLTMETER
38635	MANUAL, OPERATOR	35109	WATER TEMPERATURE SENDER
43400	MANUAL, INSTALL, MOBILE GEN	36650	WATER TEMPERATURE SWITCH
38192	METER, HOUR	16815	ZINC
35108	METER, WATER TEMPERATURE		
ITEMS NOT SHOWN			
44789	HARNESS, GENSET, 32.0 BEDA SRC		

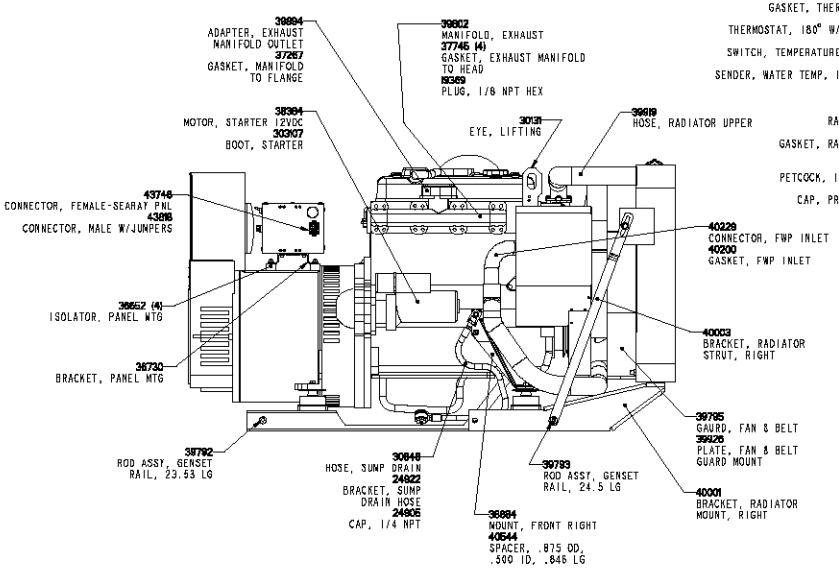

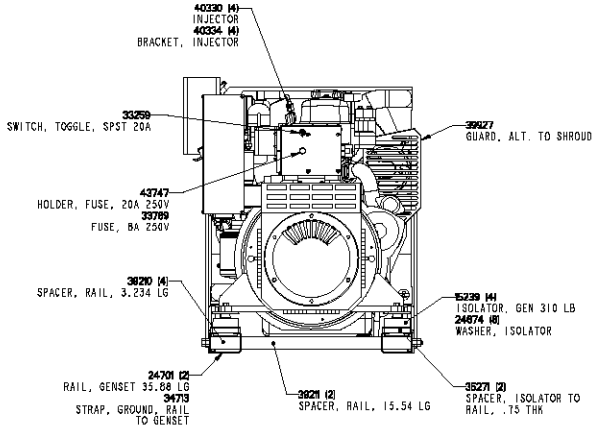

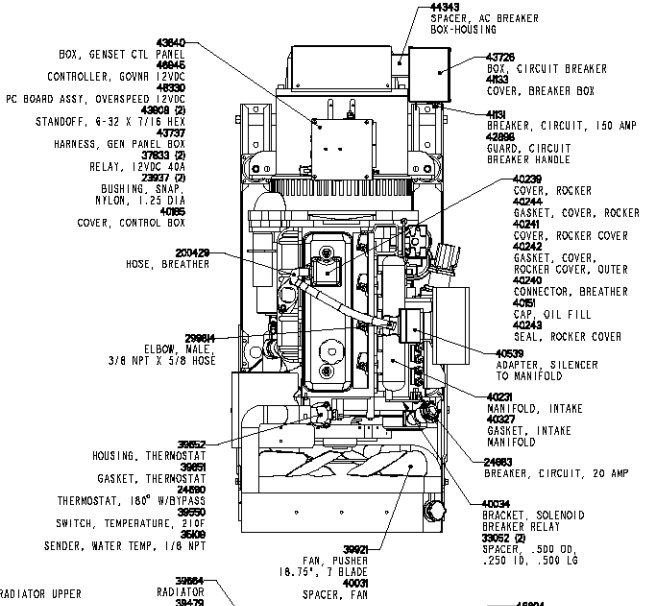

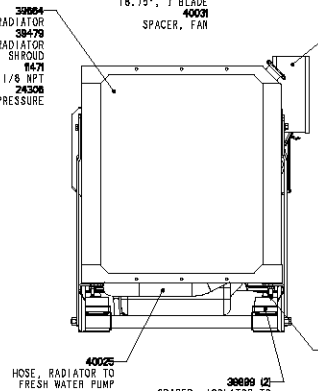

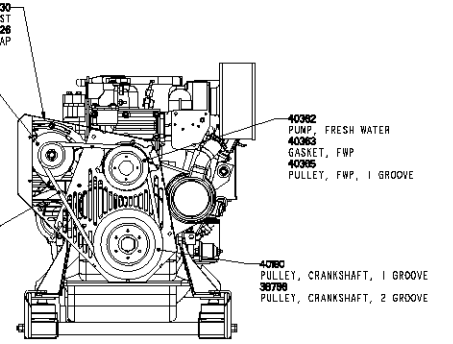

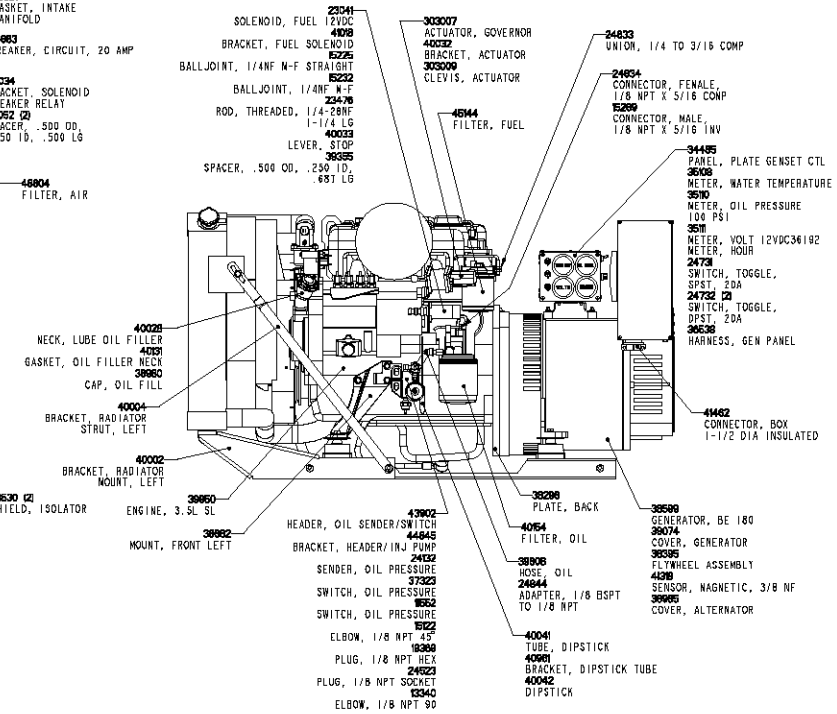

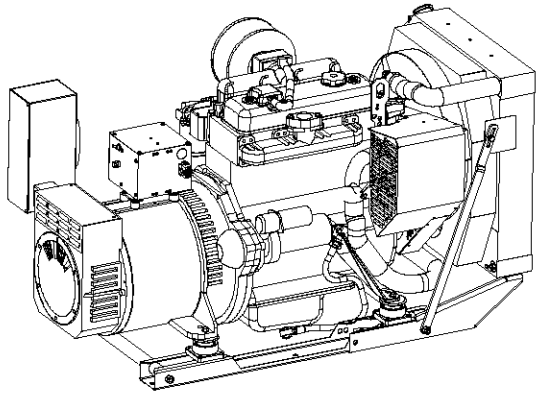

TOLERANCES (UNLESS OTHERWISE NOTED)		WESTERBEKE CORPORATION TAUNTON, MA. 02780		
INCHES	MILLIMETERS	TITLE PARTS LIST - 32.0 BEDAR		
.XX ± .03	.X ± .5			
.XXX ± .005	.XX ± .13			
ANGLES ± 1°		DRAWN BY BM	DATE 14/Apr/04	MATERIAL:
DIMENSIONS INCHES / MILLIMETERS		APPROVED BY	DATE	
SCALE 0.188	SIZE E	DRAWING NUMBER 43719	REV. -	
SHEET 1 of 1				